DocuSign Envelope ID: 32A98CC5-01EE-4B08-AA6C-0FE753766E8A

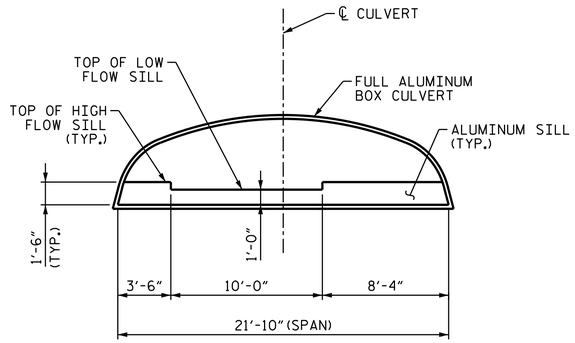


INLET END
ELEVATION NORMAL TO CULVERT
(LOOKING DOWNSTREAM)

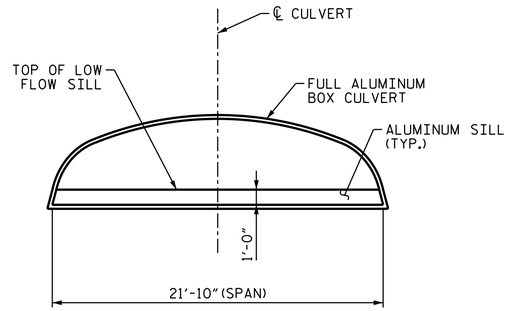


SILL @ ℄ CULVERT
ELEVATION NORMAL TO CULVERT
(LOOKING DOWNSTREAM)

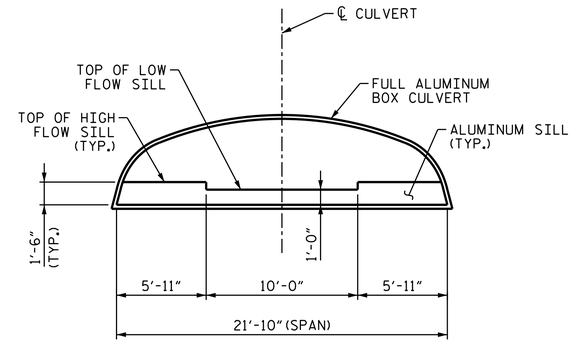


OUTLET END
ELEVATION NORMAL TO CULVERT
(LOOKING DOWNSTREAM)

## NOTES

NATIVE MATERIAL EXCAVATED FROM THE EXISTING STREAM BED OR FLOOD PLAIN AT THE PROJECT SITE DURING CULVERT CONSTRUCTION SHALL BE STOCKPILED AND LATER PLACED IN THE PROPOSED CULVERT BETWEEN SILLS TO PROVIDE A CONTINUOUS LOW FLOW CHANNEL. NATIVE MATERIAL IS SUBJECT TO APPROVAL BY THE ENGINEER AND MAY BE SUBJECT TO PERMIT CONDITIONS.

THE STOCKPILED NATIVE MATERIAL SHALL BE PLACED AS SHOWN IN THE "FLOOR SILL LAYOUT" SKETCH TO PROVIDE A 1'-0" DEPTH LOW FLOW CHANNEL BETWEEN LOW FLOW SILLS, AND SHALL BE PLACED TO THE DEPTH OF 1'-6" BETWEEN HIGH FLOW SILL.

SUPPLEMENTAL STONE OF SIMILAR CHARACTERISTICS OF THE NATIVE MATERIAL MAY BE USED AS NECESSARY WITH APPROVAL BY ENGINEER.

THE ENTIRE COST OF WORK REQUIRED TO PLACE THE EXCAVATED MATERIAL SHALL BE INCLUDED IN THE CONTRACT LUMP SUM PRICE BID FOR CULVERT EXCAVATION.

THE SILLS ARE ALUMINUM AND BOLTED INTO THE CULVERT.

THE ENTIRE COST OF THE ALUMINUM SILLS SHALL BE INCLUDED IN THE LUMP SUM PRICE BID FOR THE ALUMINUM BOX CULVERT.

TOP OF LOW FLOW SILLS SHOULD MATCH STREAM BED ELEVATION IN LOW FLOW CHANNEL OF STREAM.

DO NOT SET ELEVATION OF HIGH FLOW SILLS ABOVE BANK FILL.

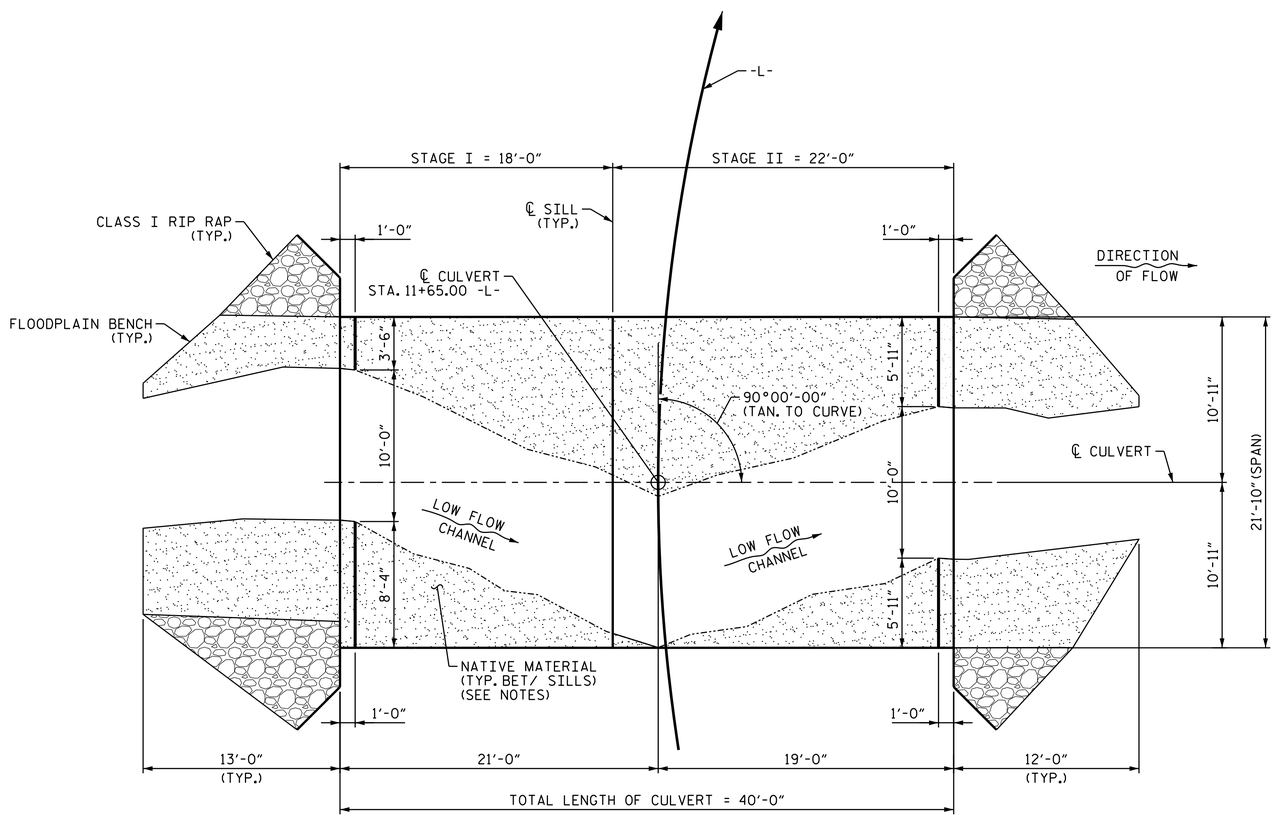


FLOOR SILL LAYOUT

PROJECT NO. 17BP.14.R.167
CHEROKEE COUNTY
STATION: 11+65.00 -L-

SHEET 3 OF 3

STATE OF NORTH CAROLINA
DEPARTMENT OF TRANSPORTATION
RALEIGH

SINGLE 21'-10" x 5'-8"
ALUMINUM BOX CULVERT
90° SKEW

| REVISIONS | | | | | | SHEET NO. |
|---|---|---|---|---|---|---|
| NO. | BY: | DATE: | NO. | BY: | DATE: | S-3 |
| 1 | | | 3 | | | TOTAL SHEETS |
| 2 | | | 4 | | | 3 |

DOCUMENT NOT CONSIDERED FINAL UNLESS ALL SIGNATURES COMPLETED

NORTH CAROLINA PROFESSIONAL SEAL 19299 ENGINEER THOMAS M. HARRIS

DocuSigned by: Thomas Harris 12/1/2021
E9EBC057AC144EE...

WSP USA Inc.
434 FAYETTEVILLE STREET
SUITE 1500
RALEIGH, NC 27601
TEL: 1.919.836.4040
LICENSE NO. F-0165

| | | | |
|---|---|---|---|
| DESIGNED BY: | J. WHEATLEY | DATE : | DEC 2021 |
| DRAWN BY: | M. HOBBS | DATE : | DEC 2021 |
| CHECKED BY: | T. HARRIS | DATE : | DEC 2021 |
| DESIGN ENGINEER OF RECORD: | T. HARRIS | DATE : | DEC 2021 |

12/1/2021
410_005_17BP.14.R.170_SMU_G003.dgn

STR. #170